International Journal of Latest Engineering Research and Applications (IJLERA) ISSN: 2455-7137

Volume –05, Issue – 03, March 2020, PP – 47-50

SMARISA: A Smart Ring for Women Safety Using Iot

Aniesh.T.R[1], Bipin.M[2], Dilipan.R[3], Savitha.G[4]

[1,2,3]*(Student, Department of Electronics and communication Engineering, Jeppiaar SRR Engineering College, India)*

[4]*(Assistant Professor, Department of Electronics and communication Engineering, Jeppiaar SRR Engineering College, India)*

Abstract: In the present situation, because of their family situation and passion women need to take every step equal to men. But they cannot step out of their safe zone at any time of the day, cannot wear clothes as per their will, nor can they can go for work in peace. Due to these reasons, there is a need for women security system. This proposed system adopted IoT technology to improve the women safety. Using IoT, physical devices can communicate with each other over internet irrespective with distance. The proposed system is a real-time, portable and secure system which used to send alert message to their relatives and nearby police station. This system consists of Raspberry pi zero board, raspberry pi camera, buzzer and a push button along with power supply. An android application is designed to simplify the user interface of smart band. Priority user has to install mobile application and select emergency contacts list (Mobile Number as well as Mail ID) to send information when they are in danger. When the button connected with raspberry pi is pressed, raspberry pi captures the image of the crime and send the emergency signal to the cloud database. As soon as emergency signal updated in the cloud, android application fetches the GPS location of user mobile and send to cloud. Similarly, it sends the SMS to contact list given by user. After that raspberry pi send the image of crime along with GPS location to mail address.

Keywords: Women Security, IoT, SMS, Raspberry Pi zero, Pi camera, buzzer.

1. Introduction

In the present situation, because of their family situation and passion women need to take every step equal to men. But they cannot step out of their safe zone at any time of the day, cannot wear clothes as per their will, nor can they go for work in peace. Due to these reasons, there is a need for a women security system. This proposed system adopted IoT technology to improve women safety. Using IoT, physical devices can communicate with each other over the internet irrespective of distance. The proposed system is a real-time, portable and secure system which used to send alert messages to their relatives and nearby police stations. This system consists of raspberry pi zero board, raspberry pi camera, buzzer and a push button along with power supply. An android application is designed to simplify the user interface of a smart band. Priorly, users have to install mobile applications and select an emergency contacts list (Mobile Number as well as Mail ID) to send information when they are in danger. When the button connected with raspberry pi is pressed, raspberry pi captures the image of the crime and sends the emergency signal to the cloud database. As soon as the emergency signal is updated in the cloud, an android application fetches the GPS location of the user mobile and sends it to the cloud. Similarly it sends the SMS to the contact person and image of crime along with GPS location to mail address.

2. Block Diagram

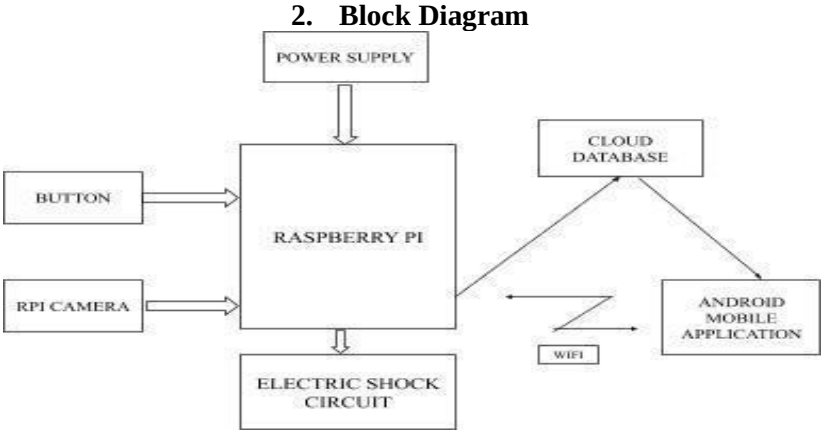

3. Hardware Components

3.1. Pushbutton

Push button switches are those which can be made to work with the force of a finger or two. Not only vehicles but camera, lifts and several other common and uncommon interactions with machines/gadgets involve push button switches applications. This push button is used to send a message to pi camera to take a photo.

3.2. Raspberrypicamera

The Camera v2 is the new official camera board released by the Raspberry Pi foundation. The Raspberry Pi Camera Module v2 is a high quality 8megapixel Sony IMX219 image sensor custom designed add-on board for Raspberry Pi, featuring a fixed focus lens. The board itself is tiny, at around 25mm x 23mm x 9mm. It also weighs just over 3g, making it perfect for mobile or other applications where size and weight are important. It connects to Raspberry Pi by way of a short ribbon cable. The high quality Sony IMX219 image sensor itself has a native resolution of 8megapixel, and has a fixed focus lens on-board. In terms of still images, the camera is capable of 3280 x 2464 pixel static images, and also supports 1080p30, 720p60 and 640x480p90 video.

3.3. RASPBERRYPI

The Raspberry Pi Zero is the smallest minicomputer of size as half of your credit card. It is half in size compared to Raspberry Pi 3 Model B. Such a tiny Raspberry Pi that's very affordable enough for any project which requires less power and high processing speed. Using Pi Zero you can build your hobby project for IoT, wearable, embedded and battery-powered projects. The Zero runs on the same single-core Broadcom BCM2835 CPU as the first Raspberry Pi. It's actually 40 percent faster than the original as the chip has been clocked higher to 1GHz.

4. Software Components

4.1. Cloud Data Base Management

Firebase is a mobile and web app development platform that provides developers with a plethora of tools and services to help them develop high-quality apps, grow their user base, and earn more profit. Firebase Cloud Messaging (FCM) provides a reliable and battery-efficient connection between your server and devices that allows you to deliver and receive messages and notifications on iOS, Android, and the web at no cost. You can send notification messages (2KB limit) and data messages (4KB limit).Using FCM, you can easily target messages using predefined segments or create your own, using demographics and behavior. You can send messages to a group of devices that are subscribed to specific topics, or you can get as granular as a single device.FCM can deliver messages instantly, or at a future time in the user's local time zone. You can send custom app data like setting priorities, sounds, and expiration dates, and also track custom conversion events.

4.2. Linux Software:

The android uses the powerful Linux kernel and it supports a wide range of hardware drivers. The kernel is the heart of the operating system that manages input and output requests from software. This provides basic system functionalities like process management, memory management, device management like camera, keypad, display etc the kernel handles all the things. Linux is really good at networking and it is not necessary to interface it to the peripheral hardware.

4.3. Android

Android is a Linux based operating system. It is designed primarily for touch screen mobile devices such as smartphones and tablet computers. The operating system has developed a lot in the last 15 years starting from black and white phones to recent smartphones or mini computers. These applications are more comfortable and advanced for the users. The hardware that supports android software is based on ARM architecture platform. The android is an open source operating system which means that it's free and anyone can use it. The android has got millions of apps available that can help you manage your life one or other way and it is available at a low cost in the market for that reason android is very popular. By the application of this android we can send and receive the alert messages.

5. Working

In this project we are using Raspberry pi zero with 1GHz BCM2835 single-core processor with 512MB RAM (Raspberry Pi zero W) as a Main controller. This controller is small in size (65mm long by 30mm wide) when compared to other controllers and able to process and capture images. And this controller also has 802.11n

wireless LAN, used to connect with the internet. The Raspberry Pi Camera Module v2 was used which is a high quality 8 megapixel Sony IMX219 image sensor custom designed add-on board for Raspberry Pi, featuring a fixed focus lens. At the moment of button pressed, raspberry pi captures the image and stores it in local storage and updates the emergency signal into a cloud database. Android application sends current location of user to emergency contacts through SMS as well as update location to the cloud. Then raspberry pi sends the GPS location and locally stored image to relative Mail Ids. An electric shock system is added with a system which is capable of producing high voltage electric pulses. These electric pulses can harm the human body which helps the user to attack the criminal.

6. Conclusion

The existing system are not powerful enough to prevent crimes against women. Main purpose of this system is fast process, low cost of development, acceptable quality, accurate tracking. This paper put forth a technique where a women, when in danger, can instantaneously intimate to the concerned authorities. This technique further uses the image and alert message and video to inform the family and police.

References

[1] A. Priyadarshini, R. Thiyagarajan, V. Kumar, T.Radhu, “Women Empowerment towards developing India”,IEEE Conference in Humanitarian Technology Conference,21-23 Dec 2016,Agra,India

[2] J.K.Thavil, V.P.Dhurdawale, P.S.Elake, “Study on Smart Security Technology for Women based on IoT”, International Research Journal of Engineering and Technology(IRJET), Vol:4, Issue: 02,Feb 2017

[3] Geetha Pratyusha Miriyala, P.Sunil, Ramya Sree Yallapalli, Vasantha Rama Lakshmi Pasam, Tejaswi Kondapalli, Anusha Miriyala, “Smart Intelligent Security System for Women”, International Journal of Electronics and Communication Engineering & Technology (IJECET) ,Vol: 7, Issue 2, March-April 2016, pp. 41–46,Andhra Pradesh,India

[4] A.Helen, M. Fathima Fathila, R.Rijwana, Kalaiselvi V.K.G, “A Smart Watch for Women Security based on IoT Concept,” 2nd International Conference on Computing and Communications Technologies(ICCCT),pp. 23-24 Feb 2017, Chennai, India

[5] M.Thiyagarajan, Chaitanya Ravendra, “Integration in the Physical World in IoT using Android Mobile Application,” International Conference on Green Computing and Internet of Things(ICGCIoT), pp. 8-10 Oct,2015

[6] Sharifa Rania Mahmud, Jannatul Maowa & Ferry Wahyu Wibowo, “Women Empowerment: One Stop Solution for Women,” International Conferences on Information Technology, Information System and Electrical Engineering, 2017, pp.485 -488

[7] Ravi Sekhar Yarrabothu and Bramarambika Thota, “ABHAYA:An Android App For The Safety Of Women ,” IEEE Indicon , 2015, pp.1-4

[8] Teena Khandelwal and Manisha Khandelwal , “Women Safety Device Designed using IOT & Machine Learning ,”IEEE Smarworld, Ubiquitous Intelligence &Computing ,Advanced &Trusted Computing, Scalable Computing & communications, Cloud & Big Data Computing, Internet Of People & Smart City inventions, 2018, pp.1204-1210

[9] Prof. Sunil K Punjabi, Prof. Survarna Chaure and Prof. Ujwala Ravale, “Smart Intelligent System For Women & Child Security,” IEEE 9th annual information technology, electronics and mobile communication conference, 2018, pp. 451-454

[10] D.G.Monisha, M. Monisha ,G Pavitra and R Subhashini, "Women Safety Device & Application-FEMME ,"Vol 9, Issue 10, March 2016, pp. 1-6

[11] G.C.Harikiran, Kartik Menasinakai, Suhas Shirol, "Smart Security Solution For Women Based On Internet Of Things,"International Conference On Electrical, Electronics and Optimization Techniques(ICEEOT)," Issue 2016, pp.3551-3554

[12] Nishant Bhardwaj, Nitish Aggarwal Design & development of "Suraksha"-A women safety device," International Journal of Information and Computation Technology, ISSN 0974-2239, Vol. 4, 2014, pp.787-792

[13] Prof. Jigar Chauhan, Shivani Ahir, Smit Kapadia, "The personal stun – A smart device for women safety," International journal of research in applied science and engineering technology(IJRASET), Vol 6, Issue 4, April 2018, pp. 3084-3091